M-10634 2

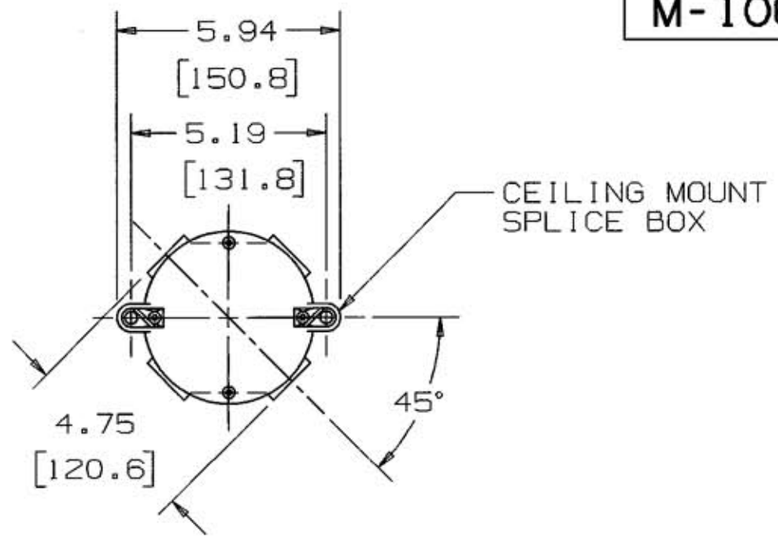

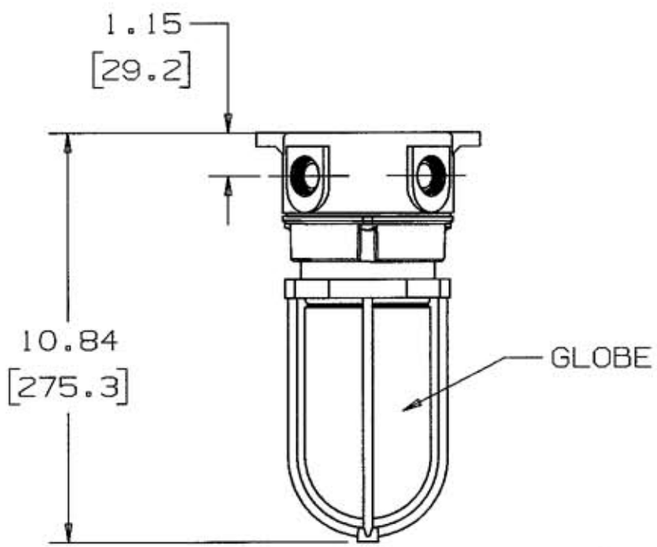

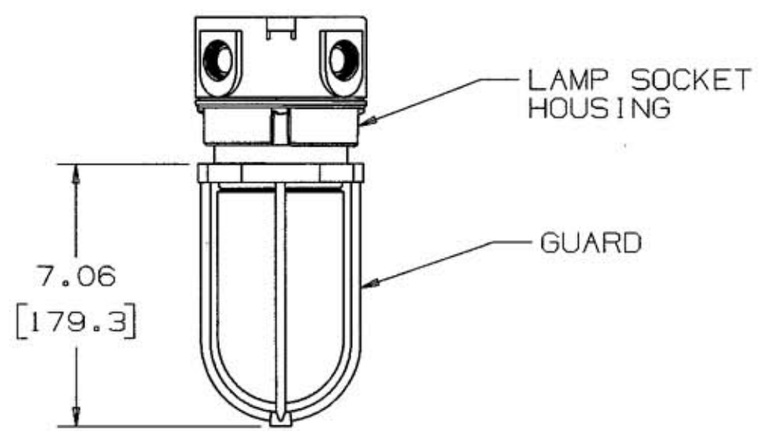

NOTES:
1. DIMENSIONS ARE NOMINAL VALUES AND SHOWN IN INCH [mm]. USE FOR REFERENCE ONLY.

LIST OF PARTS

DESCRIPTION	MATERIAL	FINISH
CEILING MOUNT	POLYESTER	GRAY
SPLICE BOX		
LAMP SOCKET	POLYESTER	GRAY
HOUSING		
GUARD	POLYESTER	GRAY
GLOBE	GLASS	NONE

SYM	REVISIONS	APP	DATE
2	REMOVED PARENTHESIS FROM DIMS. AND ADDED METERIC VALUES. ADDED COLORS TO FINISH COLUMN OF PARTS LIST. ADDED NOTE 1. 4.20 WAS 4.18. 7.03 WAS 7.06. PER DCN 14103 SPN	WUH	7/26/07
1	NEW RELEASE DCN 13948 SPN	WUH	6/5/07

THE DESIGN AND DIMENSIONS OF THE PRODUCT SHOWN ON THIS DRAWING ARE SUBJECT TO CHANGE WITHOUT NOTICE

TITLE
INCANDESCENT
CEILING FIXTURE

TOLERANCES UNLESS OTHERWISE SPECIFIED
FRACTIONS ±1/64
DECIMALS ±.005
ANGLES ±2°

WIRING DEVICE-KELLEMS
HUBBELL INCORPORATED
BRIDGEPORT, CT

DR. BY SPN	APP. BY WUH
TR. BY	SCALE 1/4
CHK'D BY WUH	DATE 6/5/07

DIMENSION SHEET FOR CAT. NO. NVX15GHGA

REPAIRABLE ☐ NON-REPAIRABLE ☐

B

M-10634

2

CODE 74545